PARTS MANUAL

TL250

Serial No.225000001~

BU3Z005-2(P-TL250BAE)

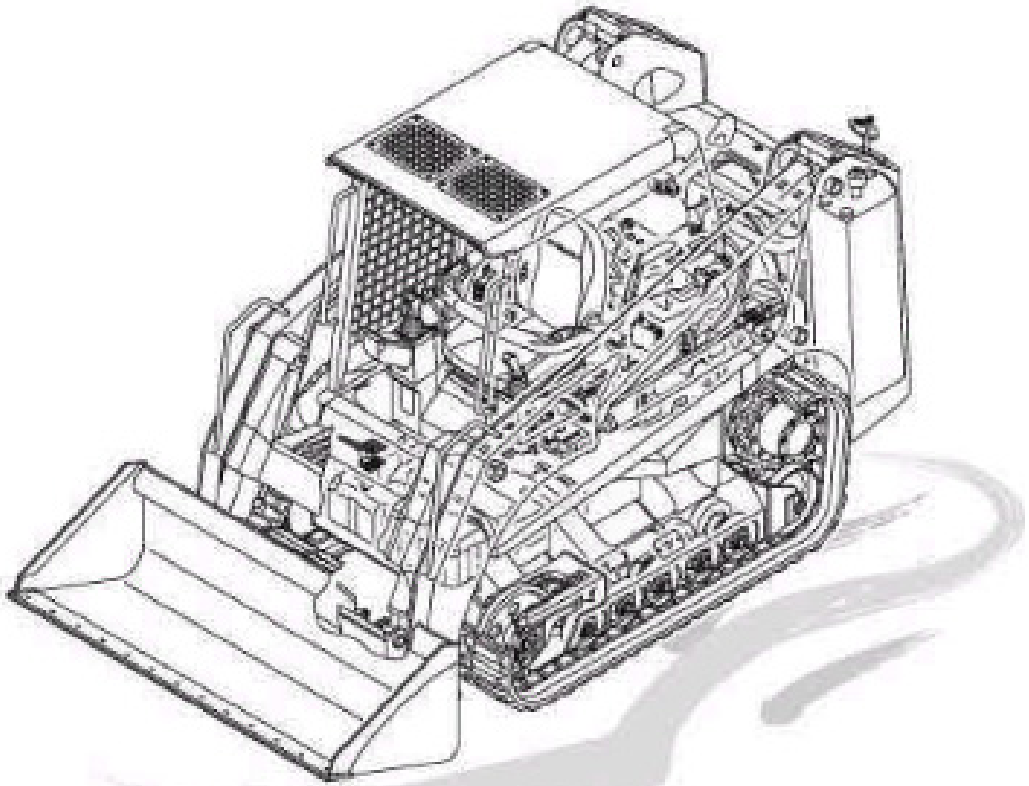

TRACK LOADER

TAKEUCHI

INDEX

Item	Part number	Description	Q'ty	Chan.	Serial No.	Serv.	Remarks
1		UNDERCARRIAGE					
2		MAIN FRAME & CONTROL LEVER					
3		ENGINE & ELECTRICAL SYSTEM					
4		HYDRAULIC PIPNG & TANK					
5		COVER & CAB					
6		ATTACHMENT					
7		DECAL & TOOL					
8		HYDRAULIC DEVICE					
10		ENGINE (V3800DI-T-E3B-TLTU-1)					
		2011.02.04					
99		KITS, ATTACHMENTS AND QUICK REFERENCE					